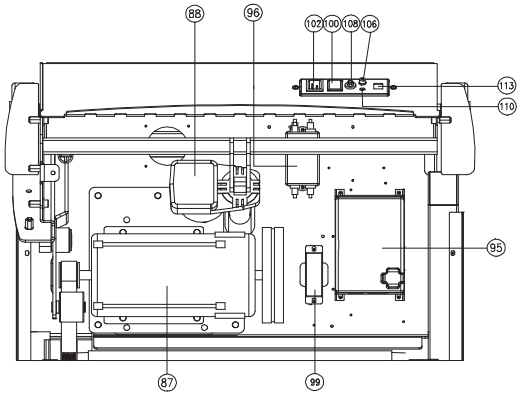

Top View of Electrical Components

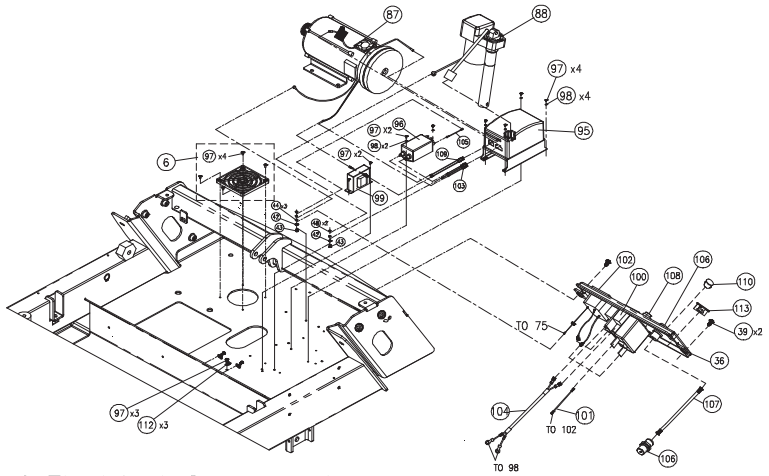

Detail View of Electrical Components

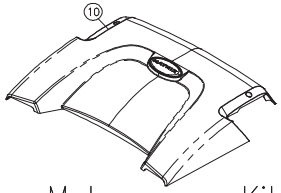

Motor cover Kit

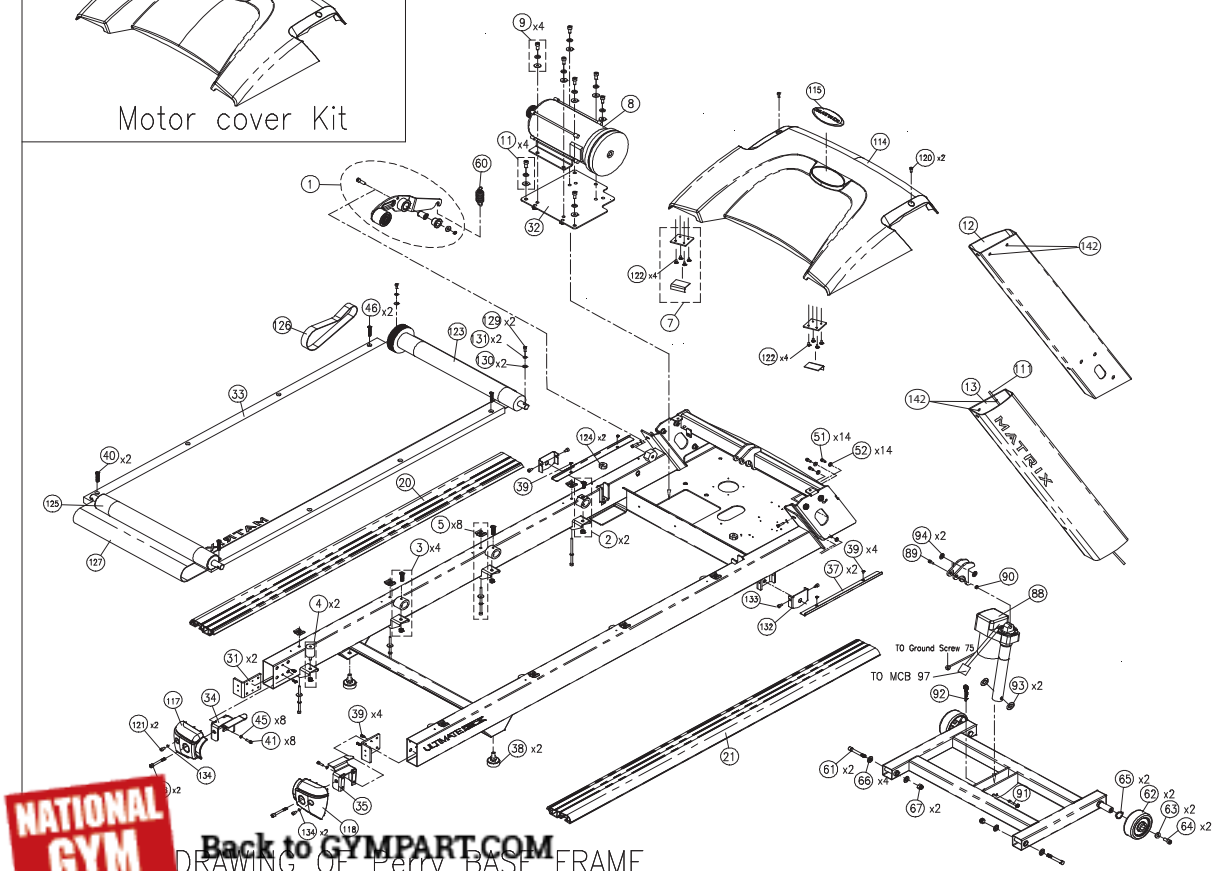

DRAWING OF Perry BASE FRAME

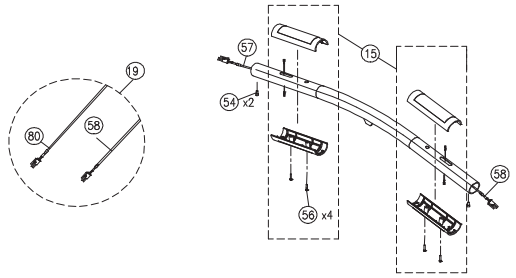

Detail view of Crossbar

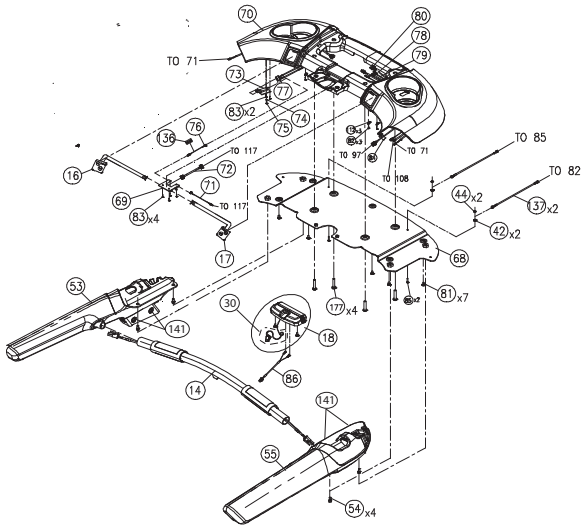

Detail view of Console Base

NATIONAL GYM SUPPLY
Back to GYMPART.COM